551785-3 TRUCK POWER STEERING KIT

657814754317

ICT BILLET LLC

Made in the USA
with USA made materials,
spacers, pulleys, & tensioners

Scan for installation video
youtu.be/effprB1OFns

Technical Support
www.ictbillet.com
email: sales@ictbillet.com
Phone: 316-800-6959

WARNING: Cancer and Reproductive Harm - www.P65Warnings.ca.gov

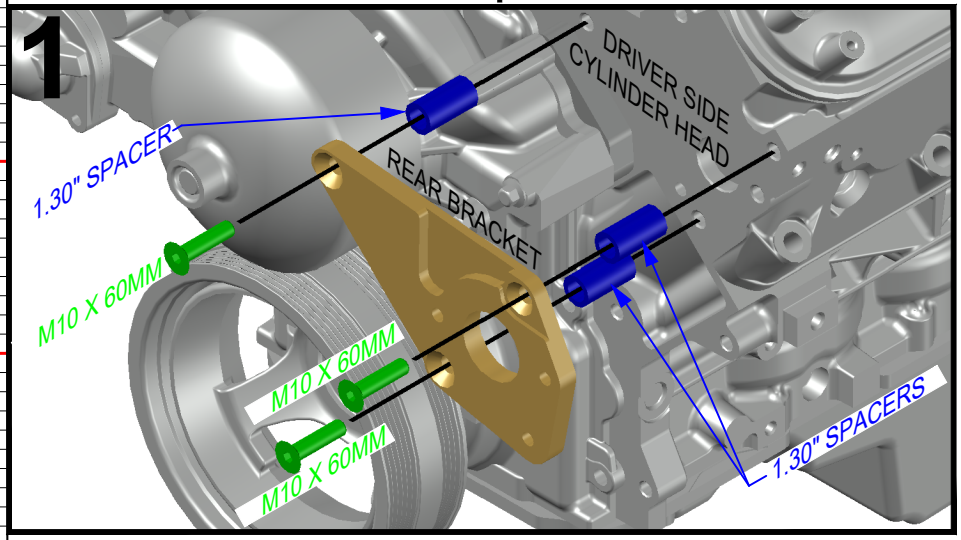

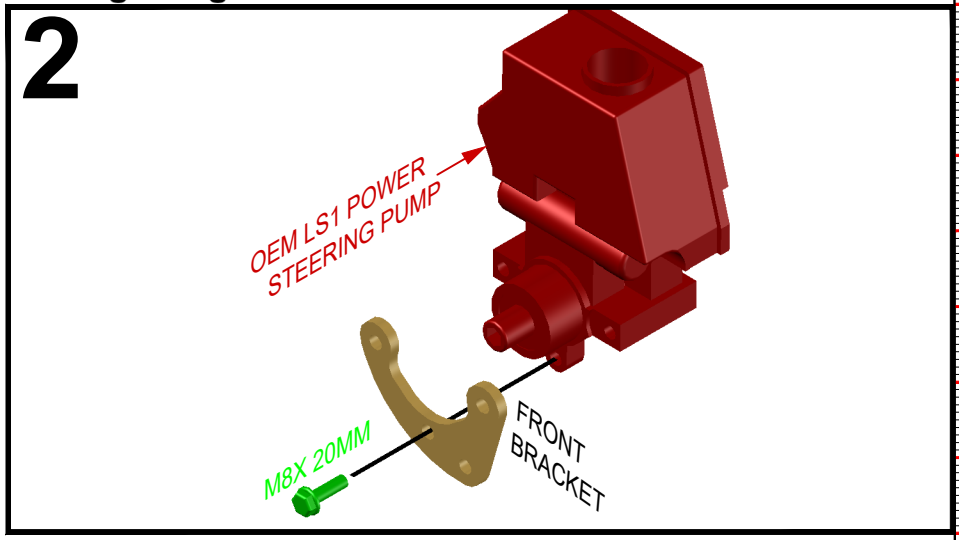

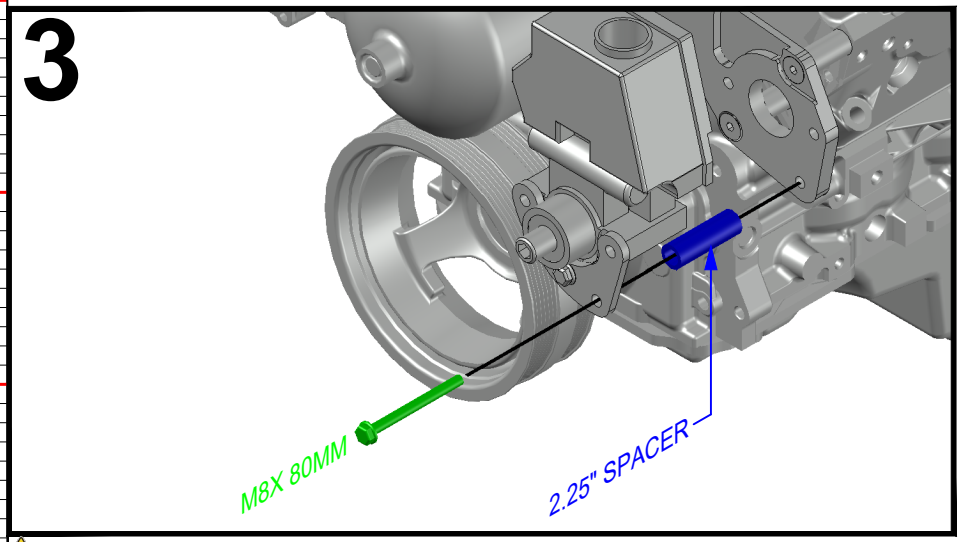

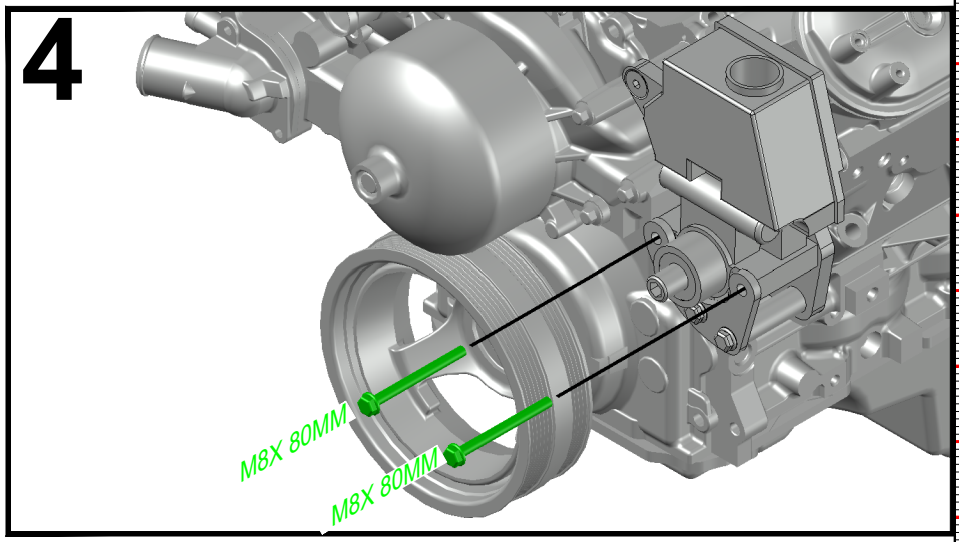

WARNING: Proposition 65 - This product can expose you to chemicals including lead, which is known to the State of California to cause cancer, birth defects, or other reproductive harm. For more information go to www.P65Warnings.ca.gov ALUMINUM - Most of the aluminum alloys used today contain some level of lead, usually less than .1%, Lead is known to the state of California to cause cancer and reproductive harm. Most aluminum allous are physiologically inert in their solid form, and the lead is contained within, however user-generated dust and/or fumes may pose a hazard if inhaled or ingested. Heating beyond a certain temperature may also provide avenues for exposure. STEEL BOLTS - Steel is an iron alloy with several metals including Nickel and Chromium. Both Nickel and Chromium are known to the State of California to cause cancer and reproductive harm respectfully. This warning applies to stainless steels as well.