551519T2-3 LS TRUCK ALTERNATOR AND POWER STEERING BRACKET KIT

IN 10ths

MM

840117209459

Torque Specs: Flange (M10 bolts 37 lb-ft, M8 bolts 18 lb-ft, M6 bolts 106 lb-in M5 71 lb-in), Flat Head Socket Cap (M10 bolts 31 lb-ft, M8 bolts 15 lb-ft, M6 bolts 90 lb-in)

Made in the USA
with USA made materials, metric flange bolts, spacers, pulleys, & tensioners

Scan to visit our web site
www.ictbillet.com

Technical Support
www.ictbillet.com
email: sales@ictbillet.com
Phone: 316-800-6959

WARNING: Cancer and Reproductive Harm - www.P65Warnings.ca.gov

1

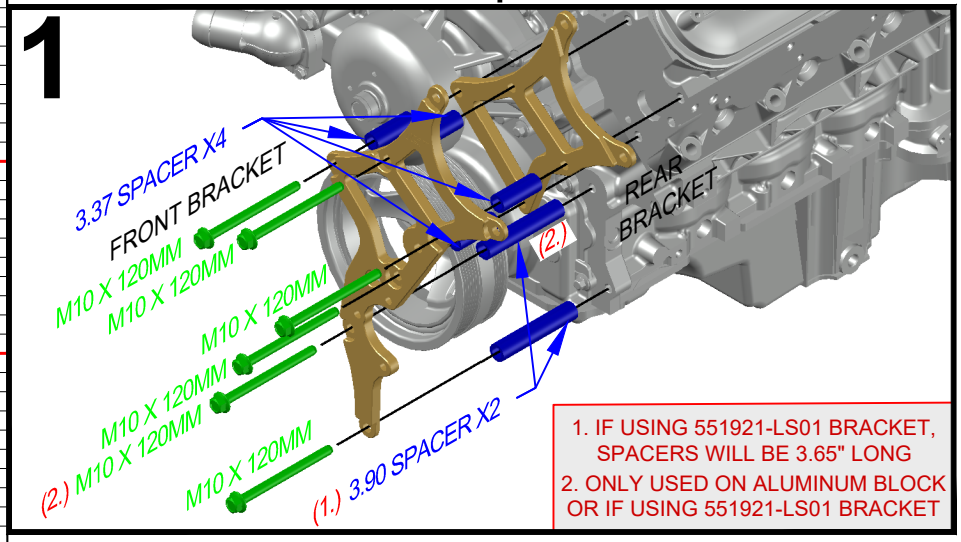

1. IF USING 551921-LS01 BRACKET, SPACERS WILL BE 3.65" LONG
2. ONLY USED ON ALUMINUM BLOCK OR IF USING 551921-LS01 BRACKET

2

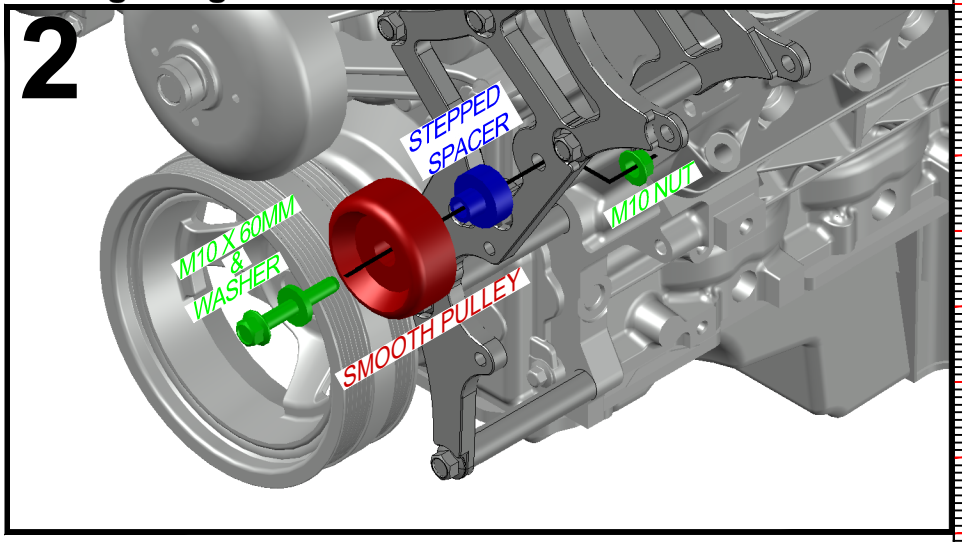

3

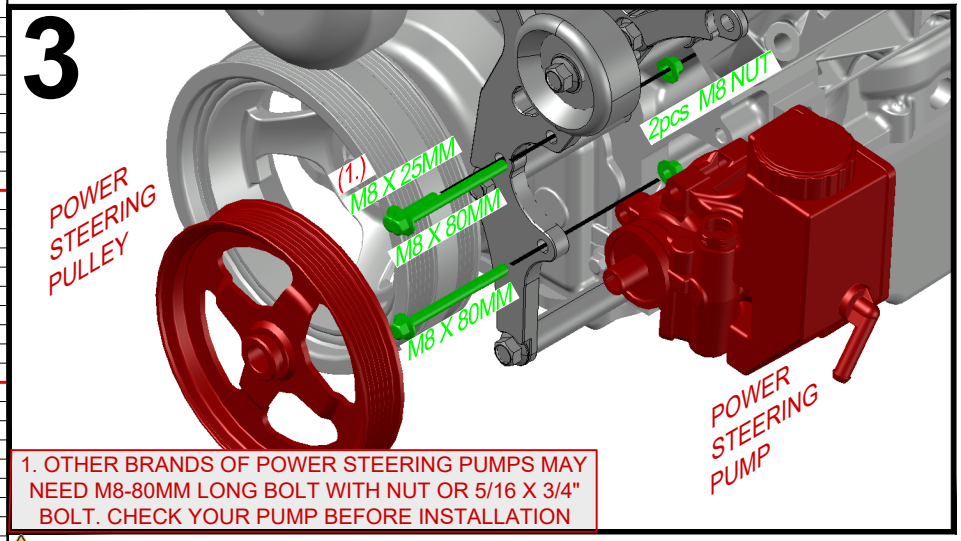

1. OTHER BRANDS OF POWER STEERING PUMPS MAY NEED M8-80MM LONG BOLT WITH NUT OR 5/16 X 3/4" BOLT. CHECK YOUR PUMP BEFORE INSTALLATION

4

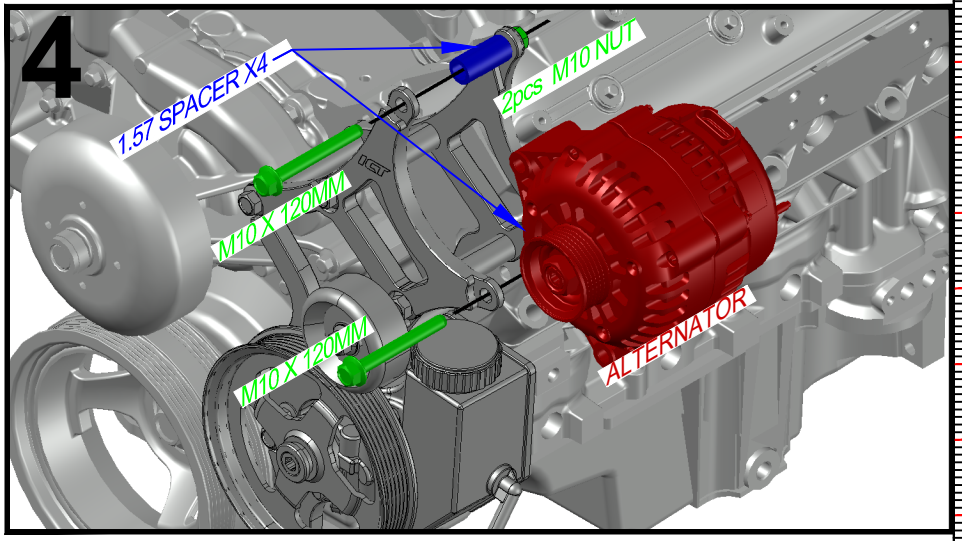

WARNING: Proposition 65 - This product can expose you to chemicals including lead, which is known to the State of California to cause cancer, birth defects, or other reproductive harm. For more information go to www.P65Warnings.ca.gov ALUMINUM - Most of the aluminum alloys used today contain some level of lead, usually less than .1%, Lead is known to the state of California to cause cancer and reproductive harm. Most aluminum allous are physiologically inert in their solid form, and the lead is contained within, however user-generated dust and/or fumes may pose a hazard if inhaled or ingested. Heating beyond a certain temperature may also provide avenues for exposure. STEEL BOLTS - Steel is an iron alloy with several metals including Nickel and Chromium. Both Nickel and Chromium are known to the State of California to cause cancer and reproductive harm respectfully. This warning applies to stainless steels as well.