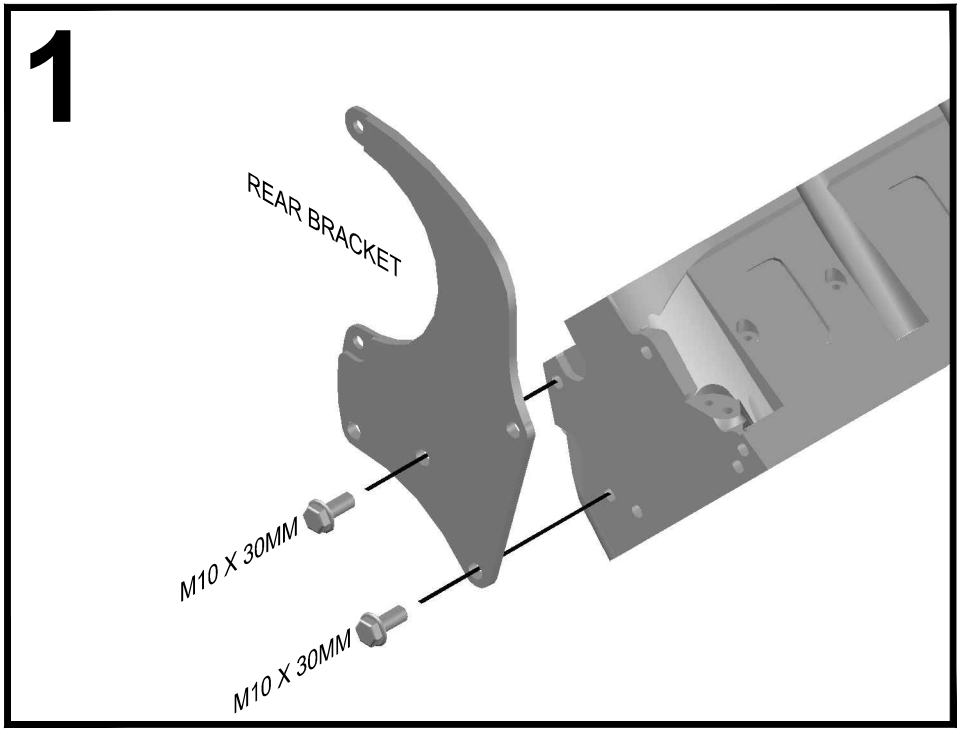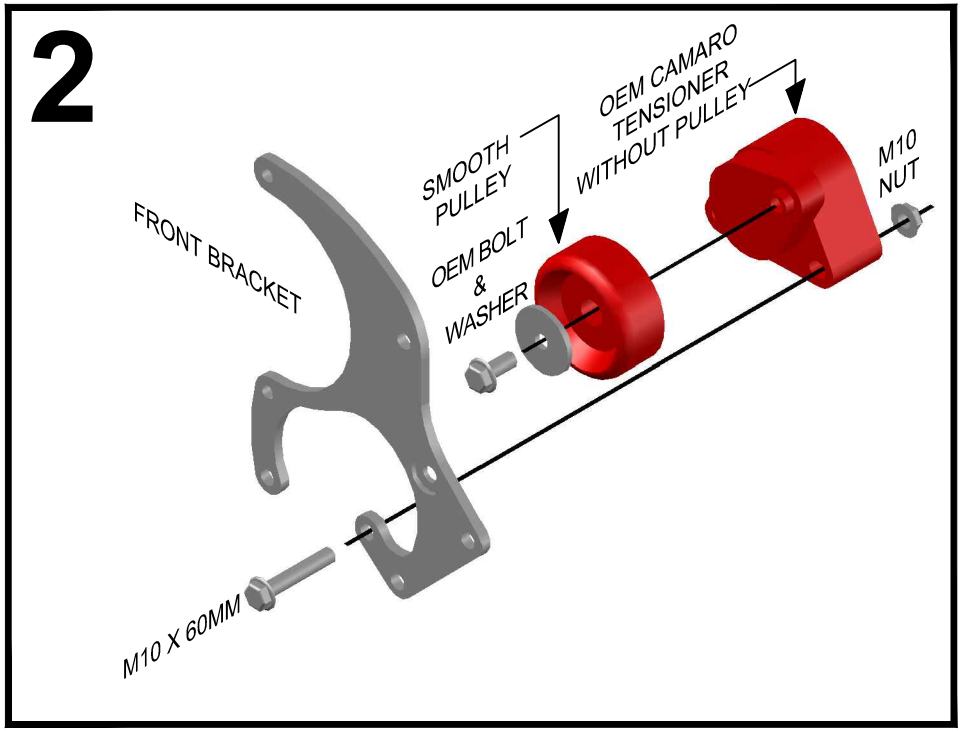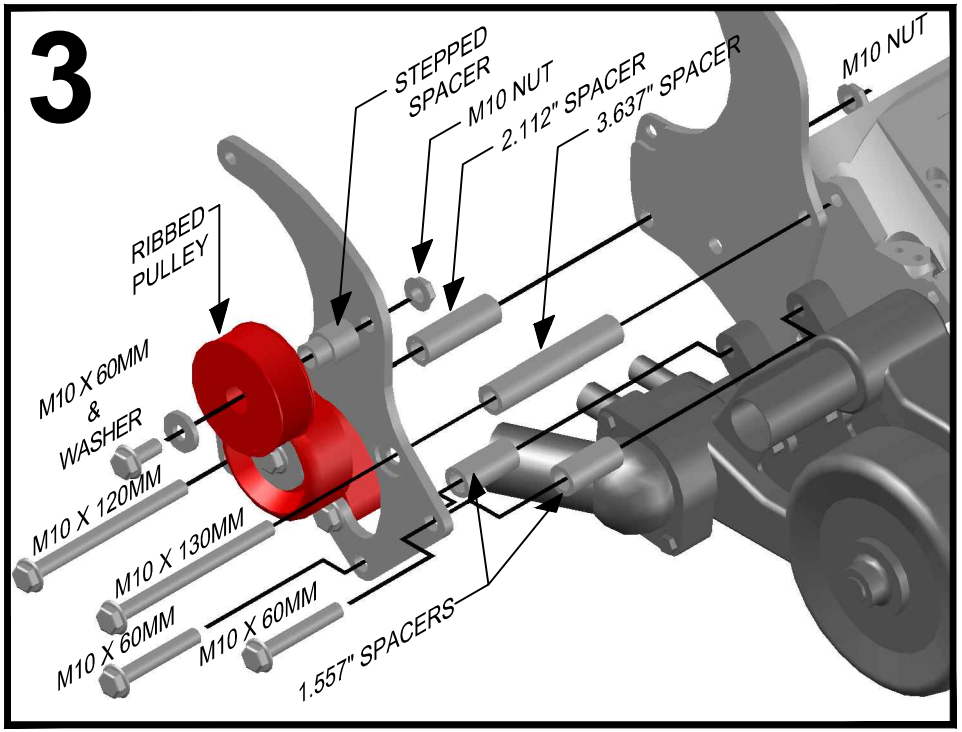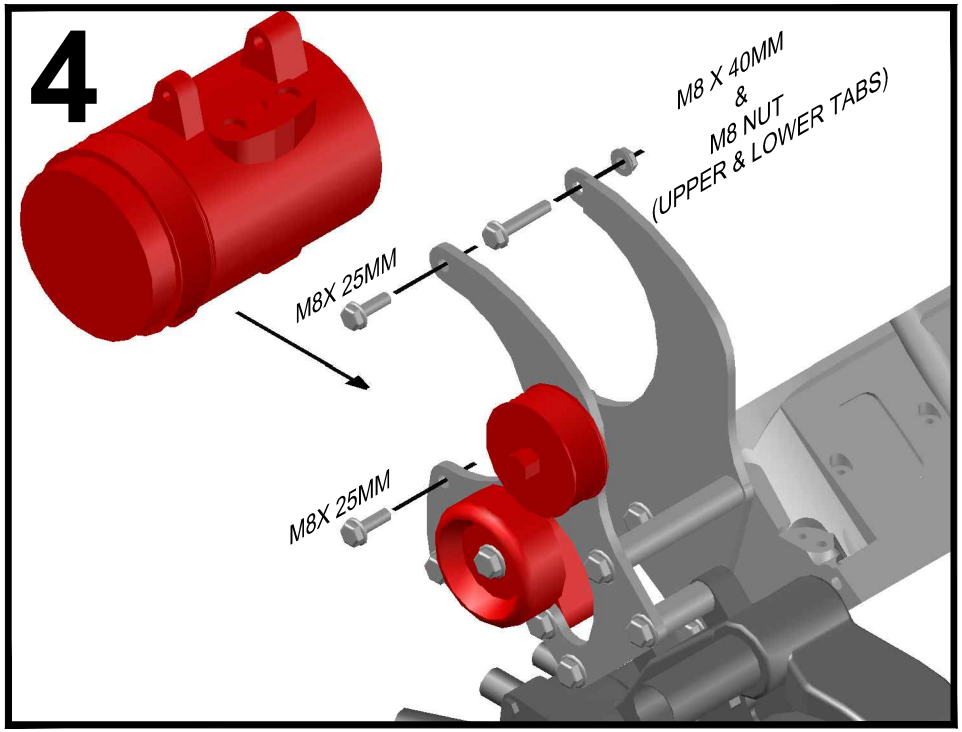551352-2 CAMARO SANDEN 7176 A/C COMPRESSOR KIT